Hello!!

- Please check the answers to the homework.
- I will answer questions if you have them.

Requested Homework

Finish Lab

- I'll build an example of the circuit from the third problem.
- Use this as a model to finish the other problems.
- You have about 20 minutes to complete the worksheet.

Today

- Combined circuits.
- Begin Presentation Project.

This Week

- M: Combined Circuits
- T: Kirchhoff's Rules
- W: Review for electricity quiz
- R: Electricity quiz
- F: Research Project Phase 1 Due.

Tonight

- Combined Circuits Worksheet.
- There are 4 combined circuits.
- Find the current and voltage on each resister.

Series Circuits

- $R_{tot}=R_1+R_2+R_3$
- $I_{tot}=I_1=I_2=I_3$
- $V_{tot}=V_1+V_2+V_3$

Parallel Circuits

- $1/R_{tot}=1/R_1+1/R_2+1/R_3$
- $I_{tot}=I_1+I_2+I_3$
- $V_{tot}=V_1=V_2=V_3$

Combined Circuits

- Resisters in series and parallel.
- Break down the individual branches of the circuit into smaller representative circuits.
- Do this until you have a circuit that is all in series.

Combined Circuits

- Keep track of representative resisters with multiple subscripts.
- Find the current in each representative (combined) resister.
- Break representative resisters apart until you have the current and voltage on each individual resister.

A 15V battery is connected in series to a 10ohm resister. The circuit then connects to a 7 and 12 ohm resister in parallel. What is the total resistance on the circuit?

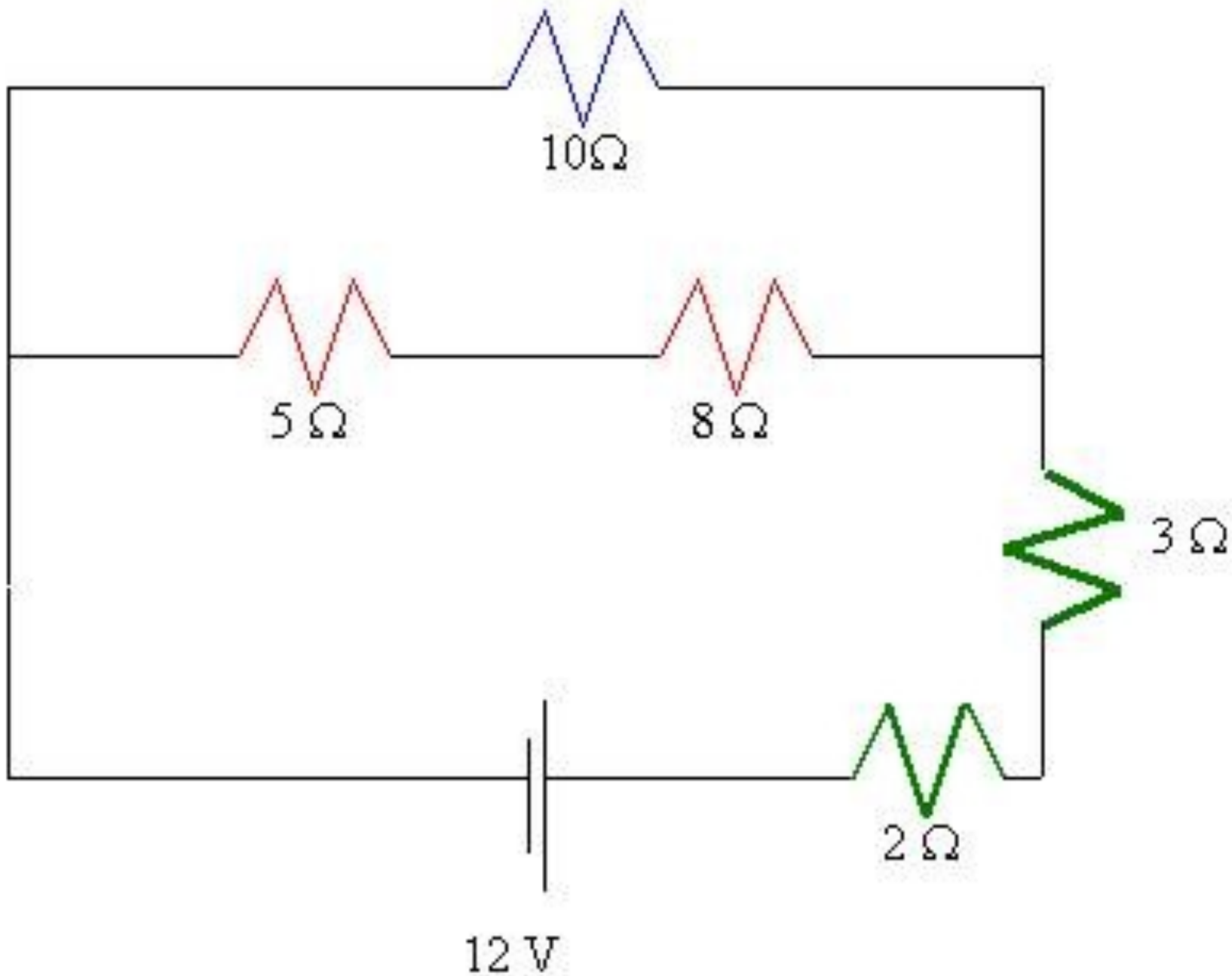

Find the total resistance of the circuit.

Determining I and V

- Begin from the resistance of the entire circuit in a series equivalence.
- You can determine the voltage and current on each brach of the circuit.
- Continue to break down the circuit until you know V & I on each individual resister.

A 15V battery is connected in series to a 10ohm resister. The circuit then connects to a 7 and 12 ohm resister in parallel. What is the voltage and current on each resister?

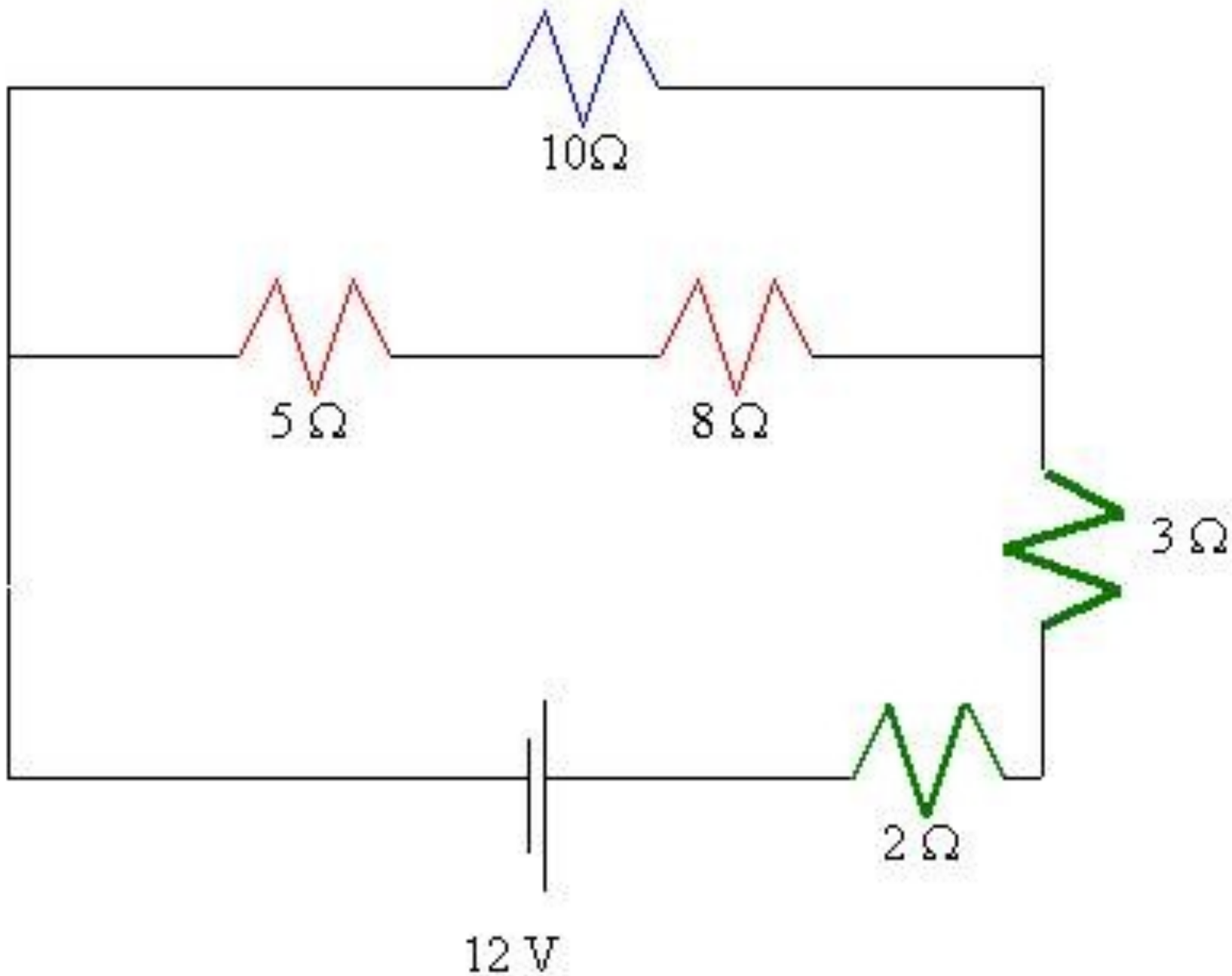

Find the voltage and current on each resister.

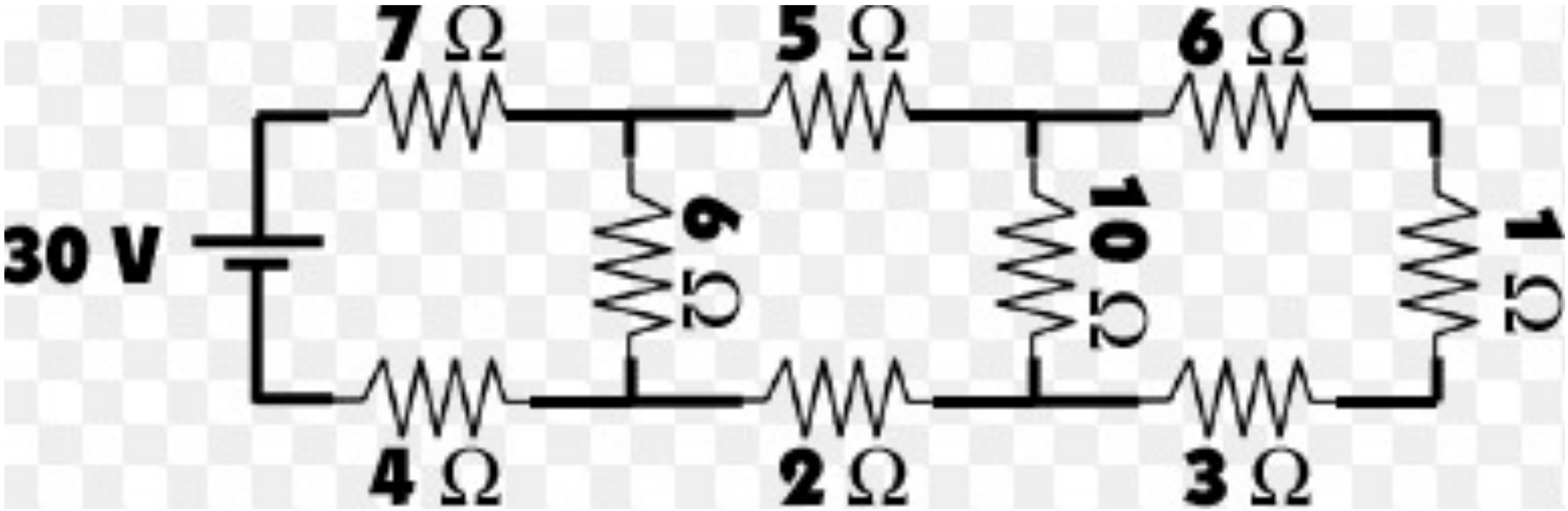

Find the voltage and current on each resister.

Research Project

- You are going to design a lab that highlights a concept that we have studied.
- You may research a topic in physics that we have not studied also.
- You may work in pairs if you would like. No more than two per group.

Basic Requirements

- Your lab must be something that you can demonstrate in class.
- You will create a worksheet that will accompany your lab.
- You will also submit a formal lab report about the lab with experimental data.

Presentation

- You will present your lab to the class.
- This will be done on the 22nd and 23rd of December.
- It should be 5 to 7 minutes in length.

Due Dates

- All written materials are due to Friday December 19th at 6:00pm.
- By this Friday (December 12th) at the end of class I want a proposal of topic, demo idea and rough draft of the lab sheet that would accompany the lab.

Grade

- This will count as a 30 point quiz.
- 10 points for the lab sheet
- 10 points for lab write up with data
- 10 points for presentation
- Rubrics to Follow

Lab Sheet

- This is the handout that accompanies the activity you will demonstrate.
- If should include background information about topic being investigated.
- Include a detailed procedure for the activity.
- There are questions about the lab data to be collected and questions that connect it to the general topic.

Today

- Pick a general topic of study.
- Begin developing a demonstration that will highlight the concept.
- You have access to the materials from labs we have done.
- I can get requested materials from the physics closet for next class.